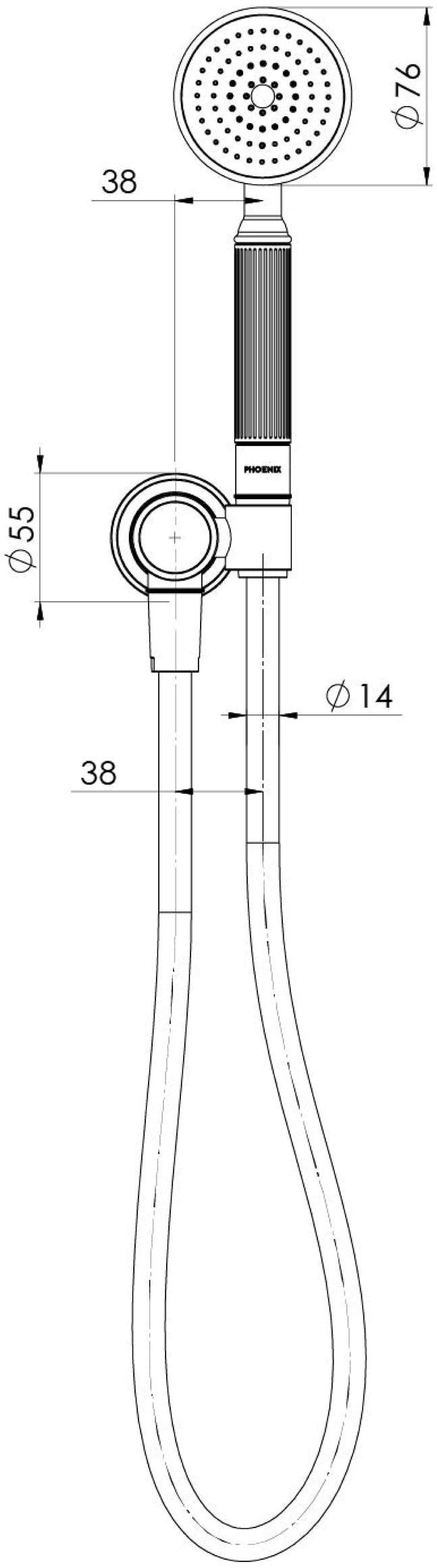
∅76
38
PHOENIX
∅55
∅14
38

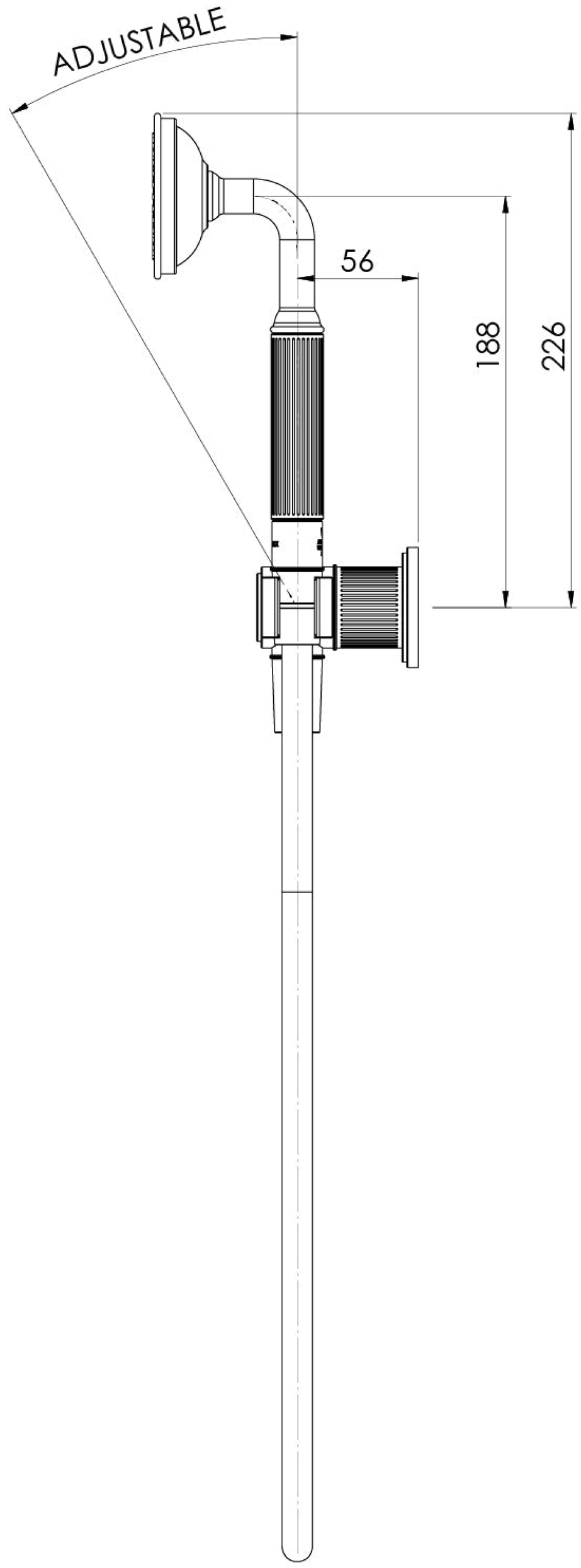
ADJUSTABLE
56
188
226